CSE360

Lab Project Proposal Submission

FALL 2023

Group No: 01

Project Name: Smart Flood Detection System

Group Members

Member-1(Salequzzaman Khan, 20101330)

Member-2(Mahdi Islam, 20101326)

Submitted to:

Faculty-1 (Shakir Rouf, Lecturer, CSE Department)

Faculty-2 (Mehedi Hasan Emo,Lecturer, CSE Department)

Submitted on:

27-11-2023

Introduction

In both developing and non developing countries, flooding is the massive natural disaster that causes loss of human and animal life and property. Floods due to earthquakes in oceans, hurricanes, rainfall and other natural disasters occur in many parts of the globe every year. During rainfall, unmanaged drainage systems in various geographical regions lead to floods and many lives are lost. If we have some system which can give us early alerts regarding floods then we can save the lives of people. A system which uses technology to detect the increase in water level and alert people beforehand so many people can be evacuated.

The 'Smart Flood Detection System' is a simple flood monitoring environment which allows to detect floods by the water level, measure the distance of the flood from a person and also measure the water pressure during the disaster. The purpose of this system is to survive human lives from the flood by creating alarm among the human beings from the incoming floods. The system will not stop the flood but it may be able to save many human lives. This small prototype will be implemented by Arduino UNO, 3 sensors, a buzzer and an output device.

Application Area

This system will be specially designed for the people who live in the flood affected areas. This system will detect the water level by a 'Water Level Sensor' and this sensor will work as a monitoring device of the water level during flood time. The 'Ultrasonic Sensor' will work as a distance monitoring device which will detect the distance of a person from the flood affecting area and it will also be shown in an output device (LCD Display or a buzzer). It will confirm that the person is currently a good distance from the affected area. Last but not least, there will be a water pressure detection system which will be used to measure the flood water pressure and send an output to the output device. It will ensure that, how much the water is creating pressure and how it's affecting the people in the flood area.

The primary user for this prototype could be the people of flood affected areas. The people can easily benefit from this device and they will be able to get alerts before the disaster. Also the organizations currently working for the people in rural areas like the Department of Disaster Management, Red Cross, BRAC and other NGOs can use this simple but yet very strong system.

In conclusion, this small system will help a lot of people in flood-affected areas and the application area is rather very broad regarding this as a flood alert system.

Technology and Tools

Components
● Arduino UNO R3 ● Water level sensor ● Ultrasonic sensor (HC-SR04) ● BMP180 Barometric Pressure Sensor ● 16x2 LCD Display ● Buzzer(3-9V) HQ ● Jumper Wires
Software used for designing the system:
● Arduino IDE
Programming Language: ● C and C++
Packages:
● Adafruit BMP085 Library ● LiquidCrystal ● NewPing ● Esplora (Buzzer) ● Adafruit Circuit Playground

Working Mechanism of Used Sensor

Water Level Sensor: A water level sensor is an easy-to-use, effective high-level/drop recognition sensor, which is obtained by having a series of parallel wires exposed traces measured droplets/water volume in order to determine the water level. It is easy to complete water-to-analog signal conversion and output analog values can be directly read by the Arduino development board to achieve the level alarm effect.

Ultrasonic Sensor: Ultrasonic sensors measure distance by using ultrasonic waves. The sensor head emits an ultrasonic wave and receives the wave reflected back from the target. Ultrasonic sensors measure the distance to the target by measuring the time between the emission and reception.

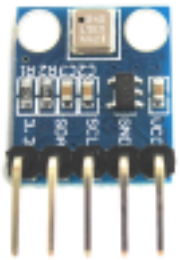

BMP180 Sensor: BMP180 is an atmospheric pressure sensor. The BMP180 sensor is mainly used to measure atmospheric pressure or barometric pressure. The working principle of the air pressure sensor is very simple, it works based on the weight of air. Because the air around us has a certain weight, and this weight has a specific pressure. However, in this instance, we'll utilize it to measure water pressure by lowering an airy balloon into a deep body of water.

Connection With ICs

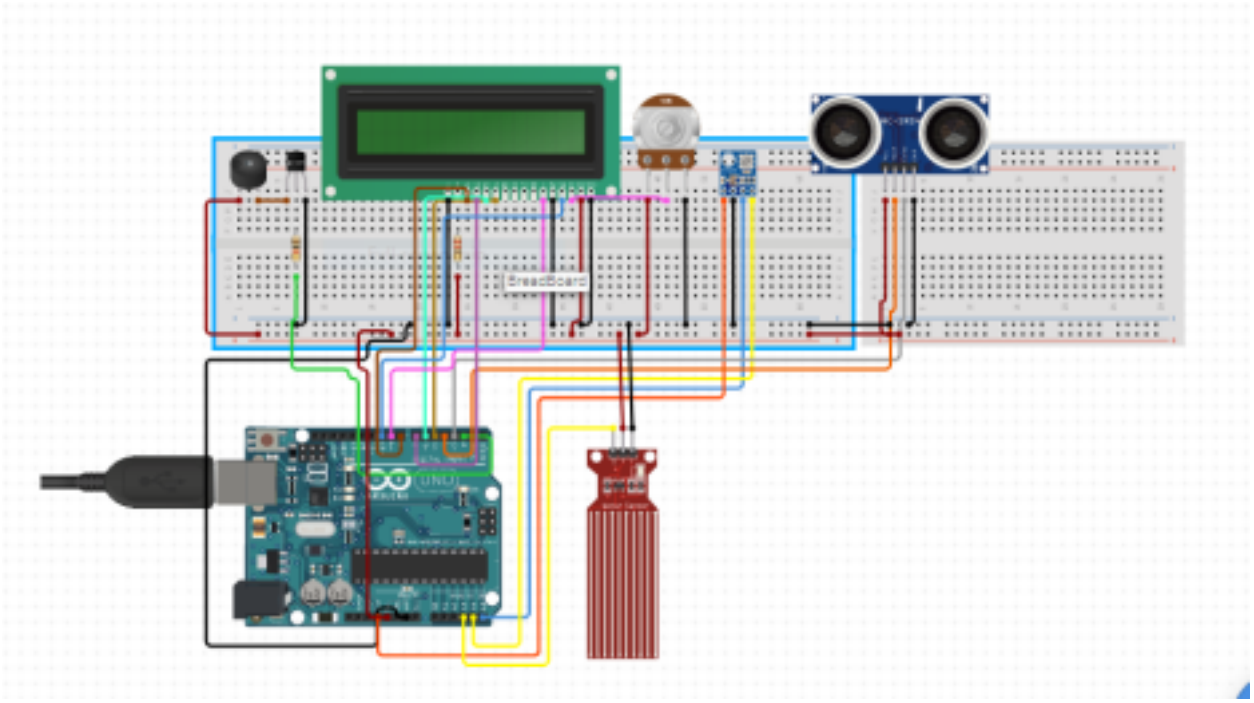

Data Flow

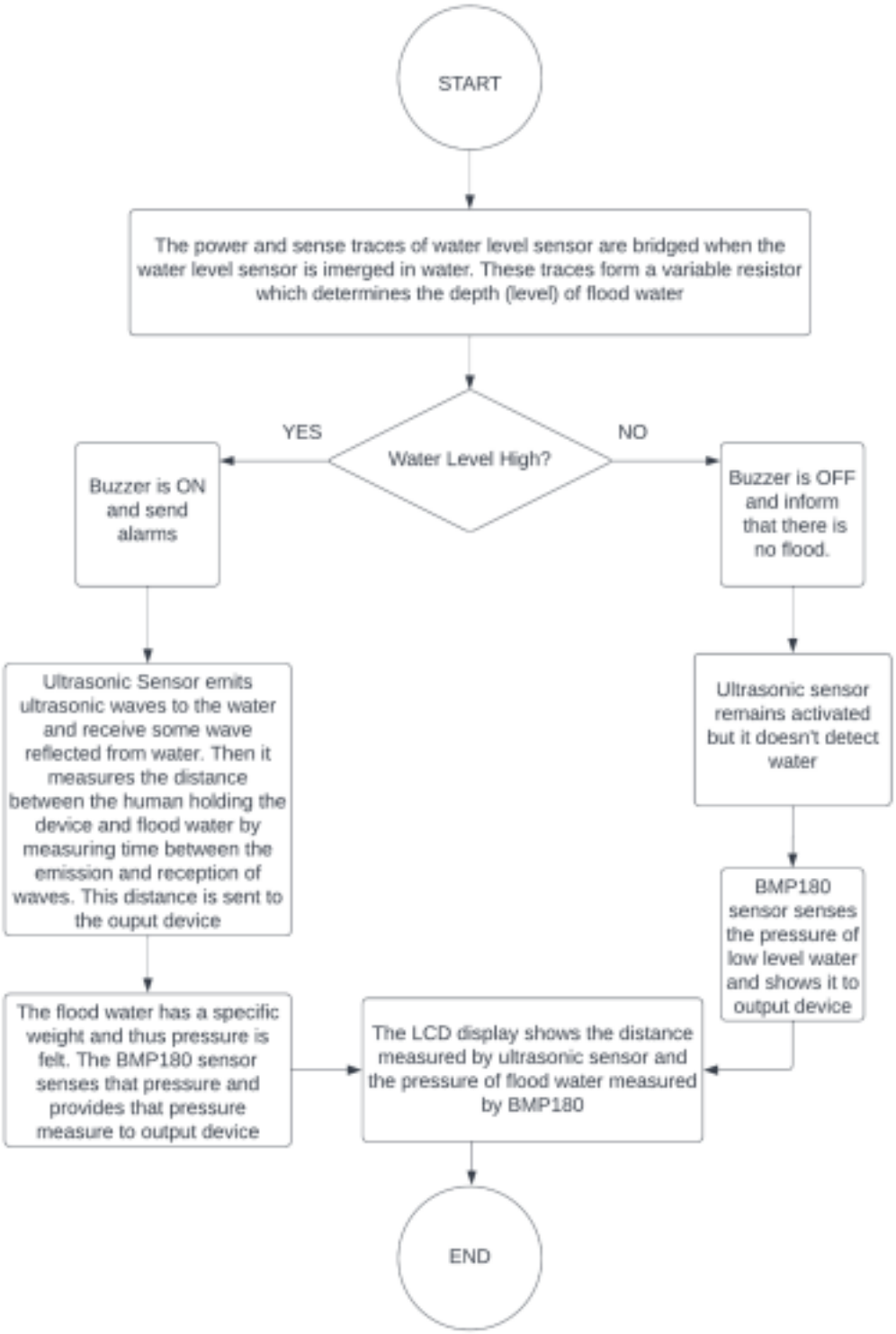
START
The power and sense traces of water level sensor are bridged when the water level sensor is imerged in water. These traces form a variable resistor which determines the depth (level) of flood water
Water Level High?
YES
NO
Buzzer is ON and send alarms
Buzzer is OFF and inform that there is no flood.
Ultrasonic Sensor emits ultrasonic waves to the water and receive some wave reflected from water. Then it measures the distance between the human holding the device and flood water by measuring time between the emission and reception of waves. This distance is sent to the ouput device
Ultrasonic sensor remains activated but it doesn't detect water
BMP180 sensor senses the pressure of low level water and shows it to output device
The flood water has a specific weight and thus pressure is felt. The BMP180 sensor senses that pressure and provides that pressure measure to output device
The LCD display shows the distance measured by ultrasonic sensor and the pressure of flood water measured by BMP180
END

Estimated Cost Analysis

Components	Cost(from https://store.roboticsbd.com/ &https://robodocbd.com/ &https://www.electronics.com.bd/)
Arduino UNO R3	840 tk
Water Level Sensor	75 tk
Ultrasonic sensor (HC-SR04)	93 tk
BMP180 Sensor	288 tk
16x2 LCD Display	231 tk
Buzzer	23 tk
Jumper wires	100 tk
Breadboard	130 tk
	Total: 1780 tk

Responsibilities of Each Member

Members	Responsibilities
Salequzzaman Khan	Code of the ICs, Gantt chart analysis, Team Instructions,Construct project proposal, cost analysis, tools analysis, buy components
Mahdi Islam	Construct IC connection, data flow analysis of the ICs,Check data flow through sensor to output devices, System refurbished

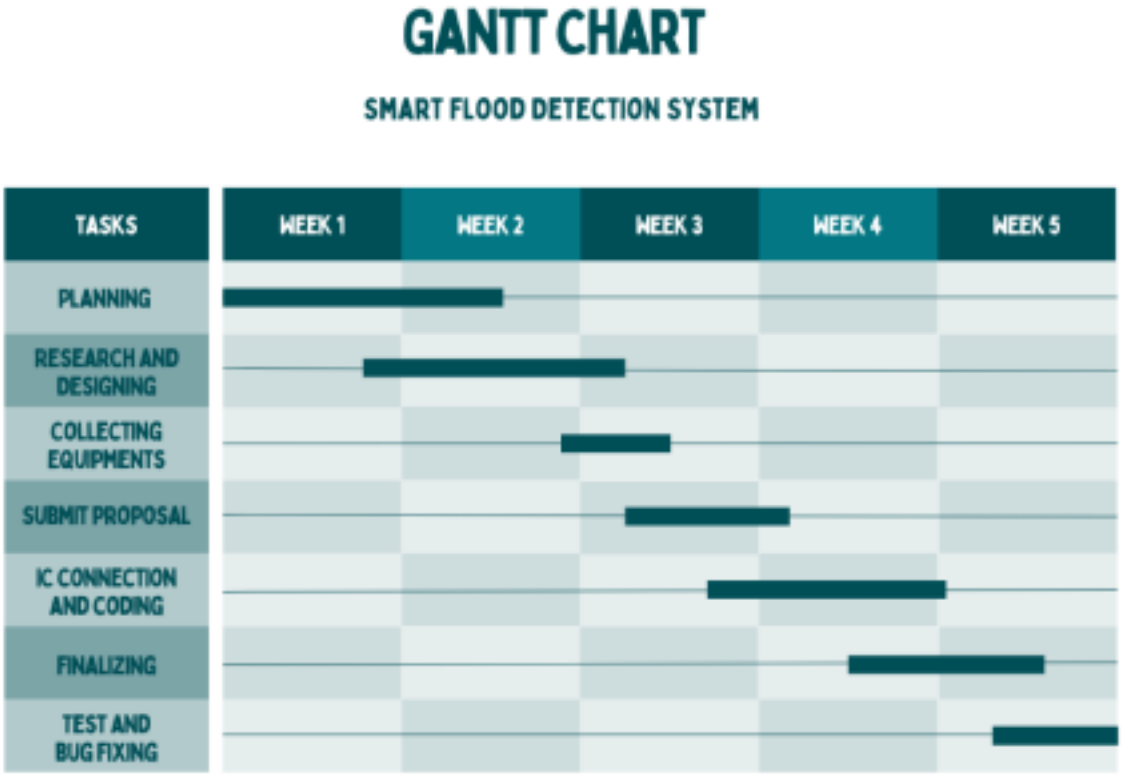

Conclusion: In conclusion, the 'Smart Flood Detection System' is a vital solution to address the impact of floods in various regions. Utilizing Arduino and sensors, it provides early flood alerts, aiding in timely evacuations and potentially saving lives. The prototype, cost-effective and scalable, targets flood-prone areas, benefitting both individuals and organizations involved in disaster management. The collaborative efforts of team members ensure a robust system with broad application. Moving forward, implementation holds promise in enhancing community resilience to recurring flood threats.